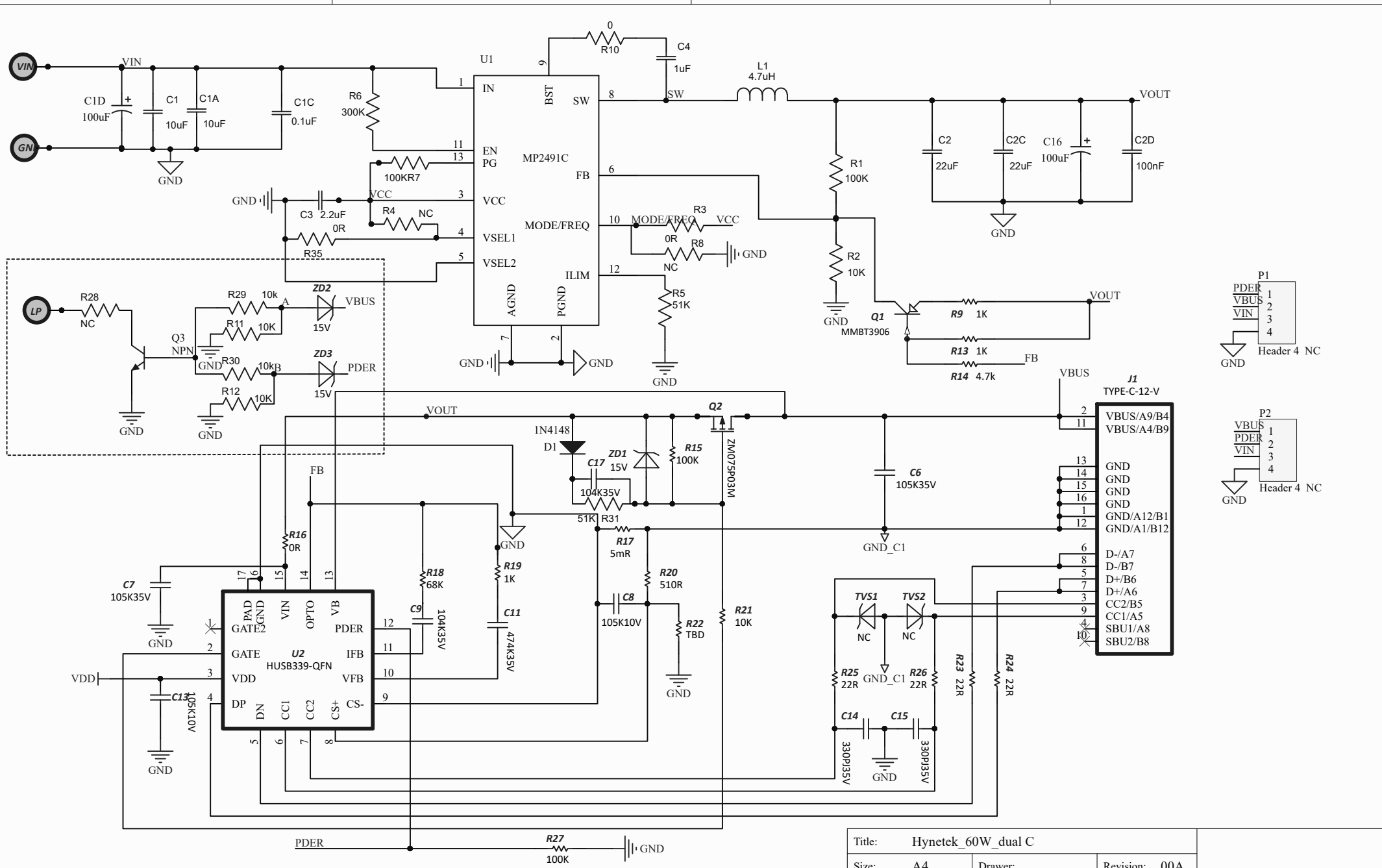

VIN
GND
C1D 100uF
C1 10uF
C1A 10uF
C1C 0.1uF
R6 300K
U1
MP2491C
IN
EN
PG
VCC
VSEL1
VSEL2
AGND
PGND
BST
SW
FB
MODE/FREQ
ILIM
R10 0
C4 1uF
L1 4.7uH
VOUT
C2 22uF
C2C 22uF
C16 100uF
C2D 100nF
R1 100K
R2 10K
R3 0R
R8 NC
R5 51K
100KR7
C3 2.2uF
R4 NC
R35 0R
LP
R28 NC
Q3 NPN
R29 10k
R11 10K
R30 10k
R12 10K
ZD2 15V
ZD3 15V
VBUS
PDER
Q1 MMBT3906
R9 1K
R13 1K
R14 4.7k
FB
P1
P2
Header 4 NC
J1 TYPE-C-12-V
VBUS/A9/B4
VBUS/A4/B9
GND
GND/A12/B1
GND/A1/B12
D-/A7
D-/B7
D+/B6
D+/A6
CC2/B5
CC1/A5
SBU1/A8
SBU2/B8
Q2 ZM075P03M
1N4148 D1
ZD1 15V
C17 104K35V
R15 100K
R31 51K
R17 5mR
R20 510R
C8 105K10V
R22 TBD
R21 10K
C6 105K35V
GND_C1
R16 0R
C7 105K35V
R18 68K
C9 104K35V
R19 1K
C11 474K35V
U2 HUSB339-QFN
PAD GND
VIN
OPTO
VB
GATE2
GATE
VDD
DP
DN
CC1
CC2
CS+
CS-
IFB
VFB
C13 105K10V
TVS1 NC
TVS2 NC
R25 22R
R26 22R
R23 22R
R24 22R
C14 330PJ35V
C15 330PJ35V
R27 100K
Title: Hynetek_60W_dual C
Size: A4
Drawer:
Revision: 00A
Date: 2019/6/17
Checker:
Sheet: 1 of 1
File: